HU 1 S RF KNX

Item no.: 4941641

KNX
KNX Secure

Description

- Flush-mounted 1-way heating actuator, KNX RF, Data Secure
- 2 binary inputs for floating contacts such as buttons, switches, temperature sensor (I2)
- With integrated controller
- Silent control of 230 V AC thermal actuators
- Integrated heating/cooling temperature controller
- Valve protection function
- Secure communication via KNX-RF with support from KNX Data Secure
- Easy installation due to the compact housing
- 2 binary inputs for floating contacts such as buttons, switches, temperature sensor (I2)
- Integrated temperature monitoring for increased operating safety, e.g. in the event of overload
- The binary inputs are assigned to the output as standard (function test before programming)

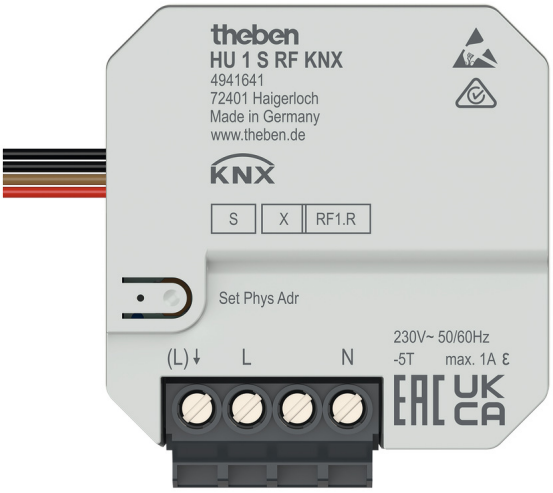

Technical data

	HU 1 S RF KNX
Operating voltage KNX	Bus voltage, <4 mA
Operating voltage	230 V AC, 50 Hz - 60 Hz
Frequency	50 - 60 Hz
Stand-by consumption	<0.4 W
Installation type	Flush-mounted
Number of channels	1

	HU 1 S RF KNX
Type of contact	1 A
Ambient temperature	-5°C ... 45°C
Predeccessor	4941640, HU 1 RF KNX, 4941640, HU 1 RF KNX

Wiring Diagrams

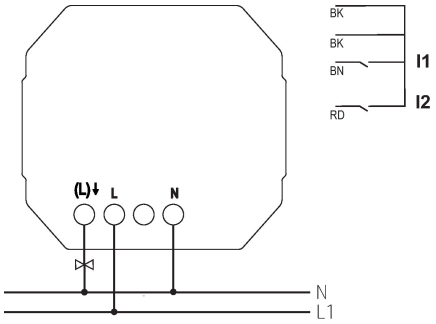

HU 1 S RF KNX

Item no.: 4941641

Scale Drawings

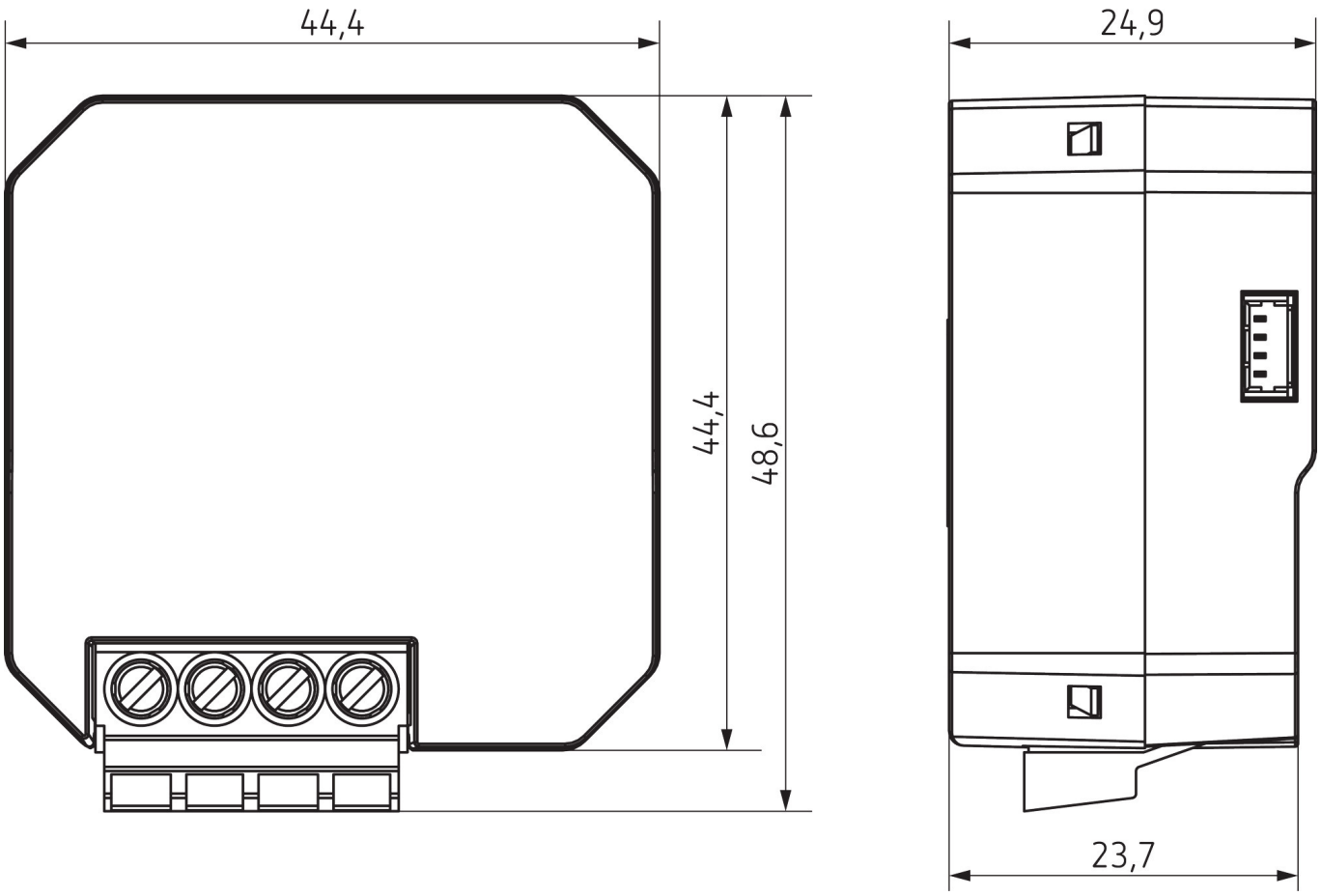

Accessories

Temperature sensor
Item no.: 9070321

Temperature sensor RAMSES IP 65
Item no.: 9070459

Flush-mounted temperature sensor
Item no.: 9070496

RailFit H
Item no.: 9080090

