JM 8 T KNX

Item no.: 4940255

KNX
Actuators DIN rail and gateways

Description

- 8-way blind actuator FIX2
- For controlling drives for blinds, shutters, sun and vision protection devices, skylights and ventilation flaps
- Manual operation on device (even without bus connection)
- LED Up and Down switching status display for each channel
- Potential-free contacts for Up and Down per channel
- Copy function for fast configuration

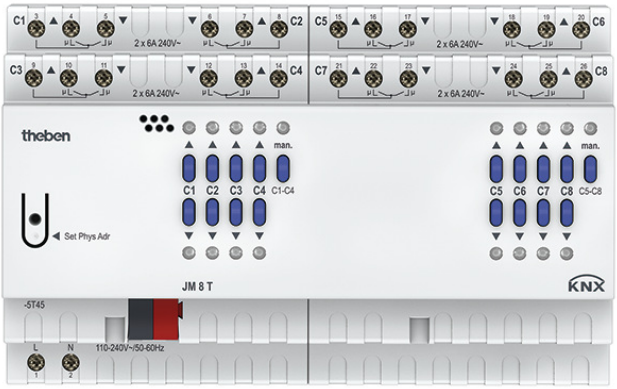

Technical data

	JM 8 T KNX
Operating voltage KNX	Bus voltage, ≤4 mA
Operating voltage	110 V AC - 240 V AC, 50 Hz - 60 Hz
Stand-by consumption	~0.5 W
Frequency	50 - 60 Hz
Number of channels	8
Width	8 modules
Installation type	DIN rail
Type of connection	Terminal screws | Bus connection: KNX bus terminal

	JM 8 T KNX
Max. cable cross section	Solid wire: 0.5 mm² (Ø 0.8) to 6 mm² | Stranded wire with end sleeve: 0.5 mm² to 4 mm²
Output	NO contact, 6 A
Switching output	Potential-free, for SELV, if the whole device switches SELV
Ambient temperature	-5°C ... 45°C
Type of protection	IP 20
Protection class	II according to EN 60 669

Wiring Diagrams

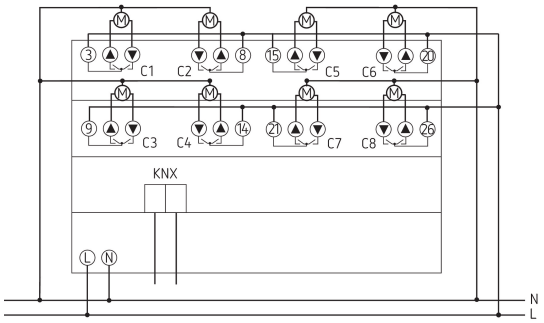

JM 8 T KNX

Item no.: 4940255

Scale Drawings

