RM 8 I KNX

Item no.: 4940215

KNX
Actuators DIN rail and gateways

Description

- 8-way C load switching actuator FIX2
- With current recognition
- For higher lamp loads
- LED switching status display for each channel
- Manual operation on device (even without bus connection)
- Adjustable characteristics: e.g. switching, delayed switching, pulse function
- Links, type of contact (NC contact/NO contact) and participation in central commands such as continuous On, continuous Off, central switching and save/call up scene
- Switching functions: On/Off, pulse, On/Off delay, staircase light with warning
- Logical links: e.g. lock, AND, release, OR

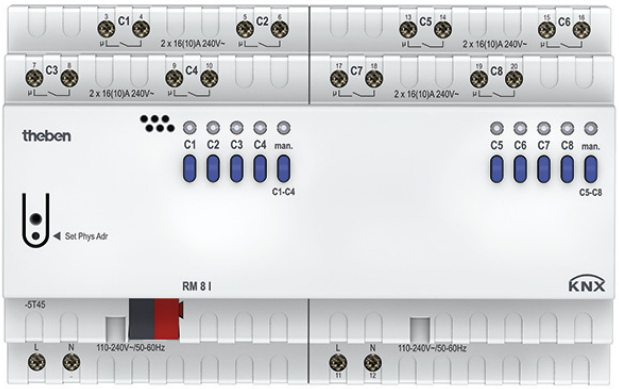

Technical data

	RM 8 I KNX
Operating voltage KNX	Bus voltage, ≤4 mA
Operating voltage	110 V AC - 240 V AC, 50 Hz - 60 Hz
Frequency	50 - 60 Hz
Stand-by consumption	~2.4 W
Installation type	DIN rail
Width	8 modules
Type of connection	Terminal screws | Bus connection: KNX bus terminal
Max. cable cross section	Solid wire: 0.5 mm² (Ø 0.8) to 6 mm² | Stranded wire with end sleeve: 0.5 mm² to 4 mm²
Number of channels	8
Type of contact	NO contact, 16 A, 10 A
Opening width	< 3 mm
Resistive load	3680 W
Capacitive load	200 µF
Incandescent/halogen lamp load	2600 W
Fluorescent lamp load (conventional) parallel-corrected	2000 W (200 µF)

	RM 8 I KNX
Fluorescent lamp load (electronic ballast)	1650 W
Energy saving lamps	410 W
LED lamp < 2 W	75 W
LED lamp 2-8 W	850 W
LED lamp > 8 W	850 W
Inrush current	max. 1500 A / 200 µs
Voltage output	240 V AC
Switching output	Potential-free
Switching of various phases	Possible
Suitable for SELV	Yes if all channels switch at SELV
Accuracy current measurement	I > 1 A: ± 8 % of measured value; I < 1 A: ± 100 mA; lowest measurable value: 150 mA
C load	√
Type	Module FIX2
Ambient temperature	-5°C ... 45°C
Type of protection	IP 20
Protection class	II according to EN 60 669

RM 8 I KNX

Item no.: 4940215

Wiring Diagrams

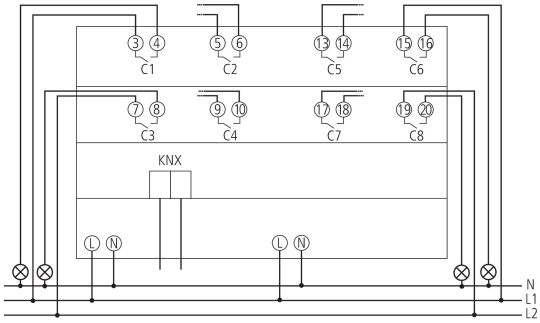

Scale Drawings

