RM 16 T KNX

Item no.: 4940205

KNX
Actuators DIN rail and gateways

Description

- 16-way switching or 8-way blind actuator FIX2
- Flexible channel function selection as switching actuator or for controlling drives for blinds,shutters, sun and vision protection devices, skylights and ventilation flaps
- LED switching status display for each channel
- Manual operation on device (even without bus connection)

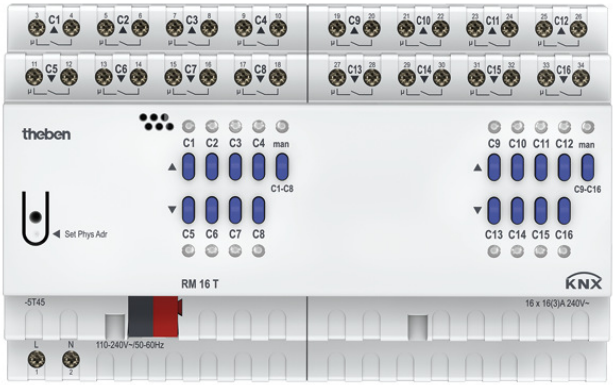

Technical data

	RM 16 T KNX
Operating voltage KNX	Bus voltage, <4 mA
Operating voltage	110 V AC - 240 V AC, 50 Hz - 60 Hz
Frequency	50 - 60 Hz
Stand-by consumption	~0.5 W
Installation type	DIN rail
Width	8 modules
Type of connection	Terminal screws | Bus connection: KNX bus terminal
Max. cable cross section	Solid wire: 0.5 mm² (Ø 0.8) to 6 mm² | Stranded wire with end sleeve: 0.5 mm² to 4 mm²
Number of channels	16
Type of contact	NO contact, 16 A, 3 A
Opening width	< 3 mm
Incandescent/halogen lamp load	2000 W
Fluorescent lamp load (conventional) parallel-corrected	1300 W (140 µF)
Fluorescent lamp load (conventional) not corrected	2000 VA

	RM 16 T KNX
Fluorescent lamp load (electronic ballast)	1200 W
Energy saving lamps	300 W
LED lamp < 2 W	55 W
LED lamp 2-8 W	600 W
LED lamp > 8 W	600 W
Inrush current	max. 800 A / 200 µs
Voltage output	240 V AC
Switching output	Potential-free
Switching of various phases	Possible
Suitable for SELV	Yes if all channels switch at SELV
C load	–
Type	Module FIX2
Ambient temperature	-5°C ... 45°C
Type of protection	IP 20
Protection class	II according to EN 60 669

RM 16 T KNX

Item no.: 4940205

Wiring Diagrams

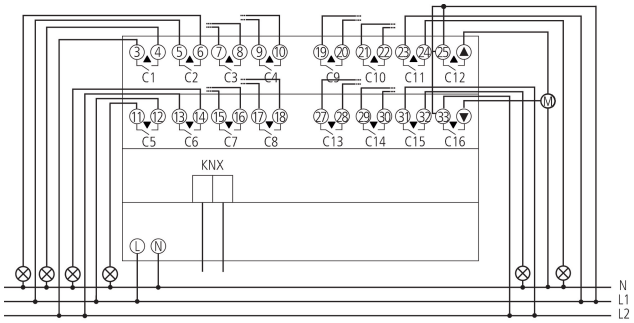

Scale Drawings

