DMG 2 T KNX

Item no.: 4930270

KNX
KNX Secure

Description

- 2-way universal dimmer actuator MIX2
- Base module MIX2
- Can be upgraded to maximum of 6 channels
- For dimming dimmable LED, incandescent lamps, LV, HV halogen lamps and energy saving lamps
- Also suitable for dimming of dimmable energy-saving lamps
- Also suitable for controlling fans
- Up to two extension modules MIX or MIX2 can be connected to one base module
- Device and KNX bus module can be swapped independently of each other
- Removable KNX bus module enables devices to be changed without reprogramming
- Manual set-up and use of switching actuators is possible without KNX bus module
- LED switching status display for each channel
- Manual operation on device (even without bus connection)
- Dimming output: 400 W/VA per channel or 800 W/VA in parallel operation
- The dimming output can be upgraded by using additional dimmboosters "DMB 1 T KNX" - dimming output 300 W/VA for each dimmbooster. Output to a maximum of 2000 W/VA by using max. 4 boosters possible
- Automatic load detection (can be deactivated)
- For R, L and C loads

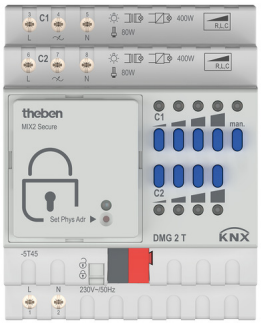

Technical data

	DMG 2 T KNX
Operating voltage KNX	Bus voltage, ≤4 mA
Operating voltage	230 V AC, 50 Hz
Frequency	50 Hz
Stand-by consumption	~0.9 W
Capacity loss max.	4.5 W
Width	4 modules
Installation type	DIN rail
Type of connection	Terminal screws | Bus connection: KNX bus terminal
Max. cable cross section	Solid wire: 0.5 mm² (Ø 0.8) to 6 mm² | Stranded wire with end sleeve: 0.5 mm² to 4 mm²
Number of channels	2

	DMG 2 T KNX
Lamp types	Incandescent, low-voltage and high-voltage halogen and dimmable energy saving lamps and LED
Switching capacity per channel	400 W
Switching capacity in parallel operation	800 W
Energy saving lamps	Trailing edge (RC-mode): 400 W
Switching capacity min.	5 W
Max. cable length	100 m
Ambient temperature	-5°C ... 45°C
Type of protection	IP 20
Protection class	II according to EN 60 669

DMG 2 T KNX

Item no.: 4930270

Wiring Diagrams

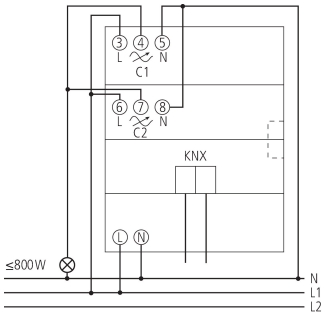

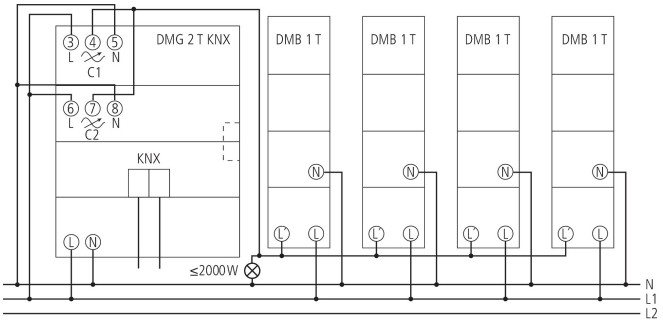

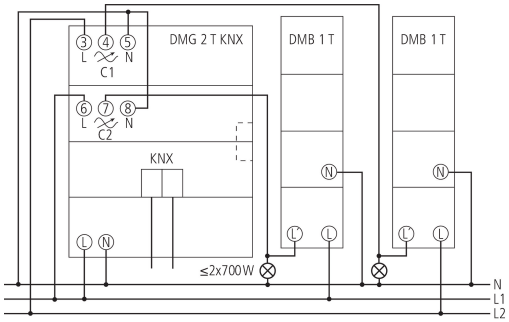

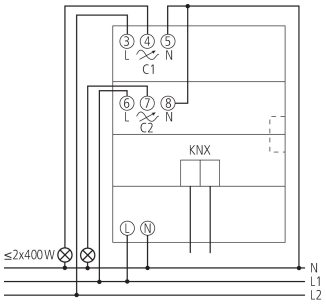

Scale Drawings

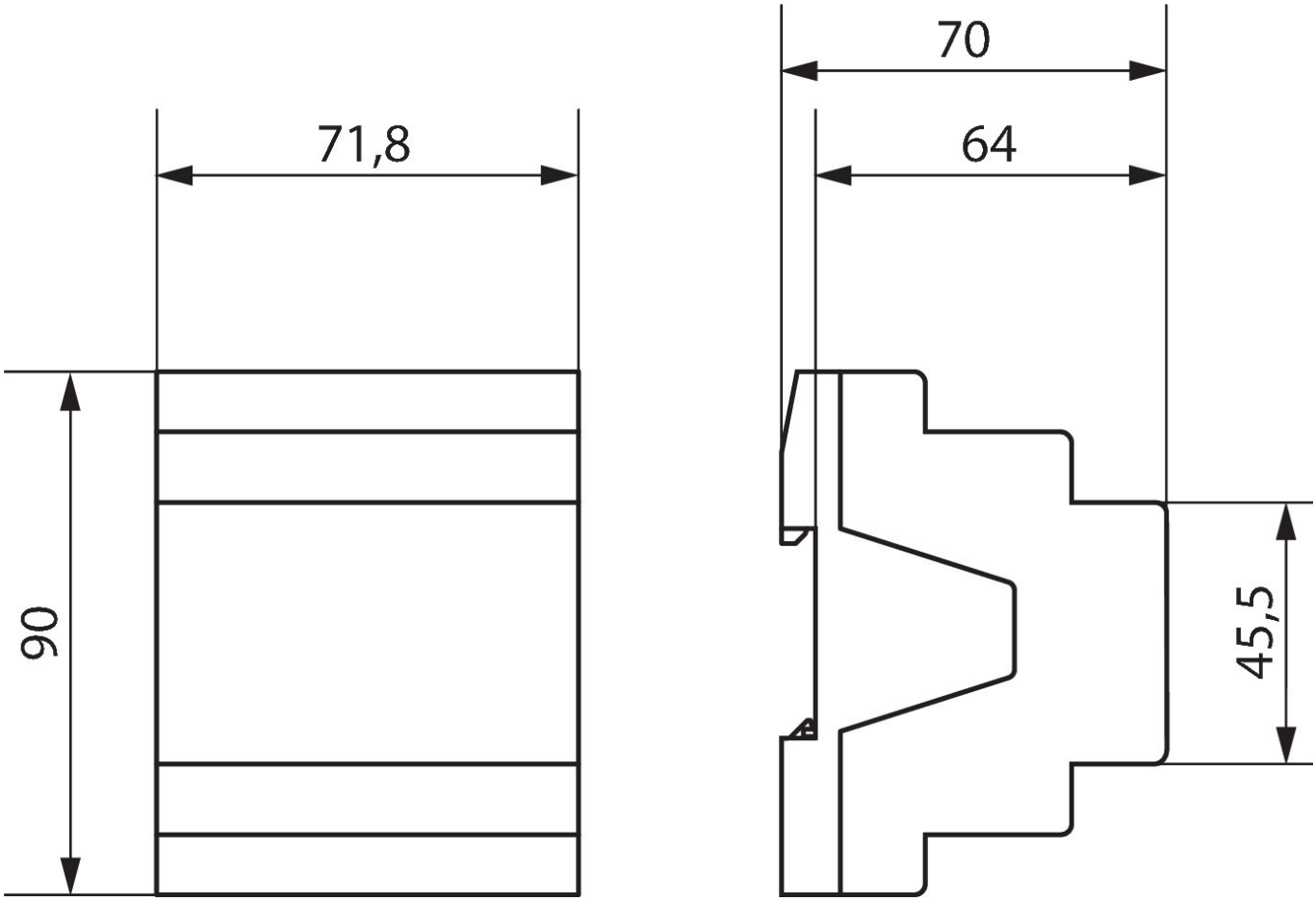

Accessories

DMB 1 T KNX
Item no.: 4930279

