LUXORliving S16

Item no.: 4800429

Smart Home
Actuators DIN rail and gateways

Description

- 16-way switching actuator LUXORliving
- LED switching status display for each channel
- Manual operation on device
- Switching functions: On/Off, pulse, On/Off delay, staircase light with warning
- Download of the installation software LUXORplug at https://luxorliving.de/luxorplug

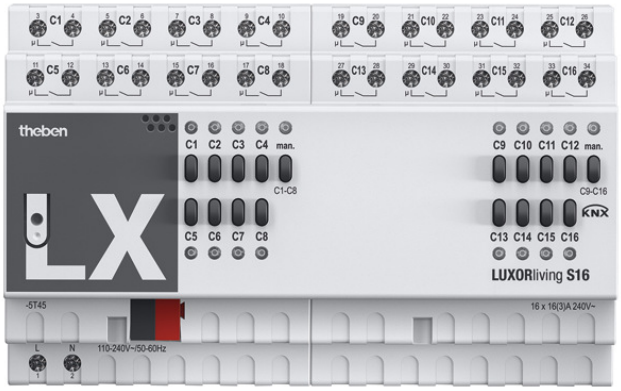

Technical data

	LUXORliving S16
Operating voltage KNX	<4 mA
Operating voltage	110 - 240 V AC
Stand-by consumption	<0.3 W
Installation type	DIN rail
Width	8 modules
Number of channels	16
Type of contact	NO contact, 16 A, 3 A
Incandescent/halogen lamp load	2000 W
Halogen lamp load	2000 W
Fluorescent lamp load (conventional) parallel-corrected	1300 W (140 µF)

	LUXORliving S16
Fluorescent lamp load (conventional) not corrected	2000 VA
Fluorescent lamp load (electronic ballast)	1200 W
Energy saving lamps	300 W
LED lamp < 2 W	55 W
LED lamp 2-8 W	600 W
LED lamp > 8 W	600 W
Inrush current	max. 800 A / 200 µs
Type of protection	IP 20
Protection class	II

Wiring Diagrams

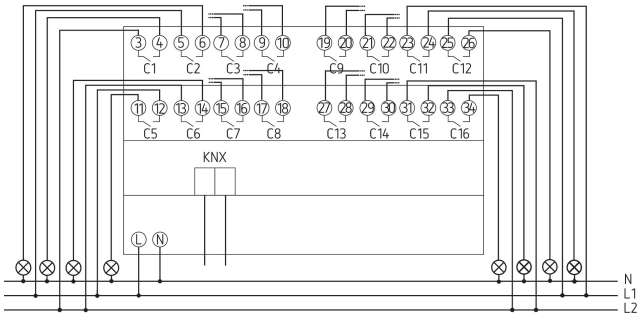

LUXORliving S16

Item no.: 4800429

Scale Drawings

