SUL 181 d 24V

Item no.: 1814011

Time and light control
Analogue time switches

Description

- Analogue time switch
- 1 channel
- Daily program
- With power reserve (NiMH rechargeable battery)
- 96 switching segments
- Quartz controlled
- Shortest switching time: 15 minutes
- Clock hands for time display and in addition 12/24 hour recognition
- Simple summer/winter time correction
- Time can be changed clockwise or anti-clockwise
- DuoFix spring terminals
- For 2 conductors each
- Wire or strand (with or without wire end sleeve)
- Wire diameter: 0.5 - 2.5 mm²
- Button for releasing plug-in connection
- Switching preselection
- Manual switch with 3 positions: Continuous ON/AUTO/continuous OFF
- Switching status display



Technical data

	SUL 181 d 24V
Operating voltage	12 - 24 V UC
Frequency	50 - 60 Hz
Number of channels	1
Width	3 modules
Installation type	DIN rail
Type of connection	DuoFix spring terminals
Drive	Quartz-controlled stepper motor
Program	Daily program
Power reserve	200 hours
Switching capacity at 250 V AC, cos φ = 1	16 A

	SUL 181 d 24V
Switching capacity at 250 V AC, cos φ = 0,6	4 A
Incandescent/halogen lamp load	1100 W
LED lamp < 2 W	20 W
LED lamp 2-8 W	180 W
LED lamp > 8 W	180 W
Shortest switching times	15 min
Programmable every	15 min
Time accuracy at 25 °C	≤ ± 1 s/day (quartz)
Type of contact	Changeover contact

SUL 181 d 24V

Item no.: 1814011

Technical data

	SUL 181 d 24V
Switching output	Potential-free and phase-independent
Number of switching segments	96
Stand-by consumption	~0.5 W
Capacity loss max.	1.3 W

	SUL 181 d 24V
Housing and insulation material	High-temperature resistant, self-extinguishing thermoplastic
Type of protection	IP 20
Protection class	II according to EN 60 730-1
Ambient temperature	-20°C ... 55°C

Wiring Diagrams

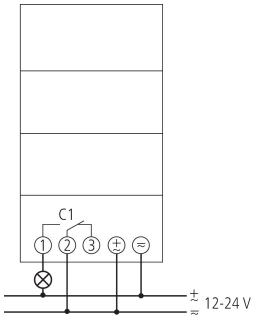

Scale Drawings

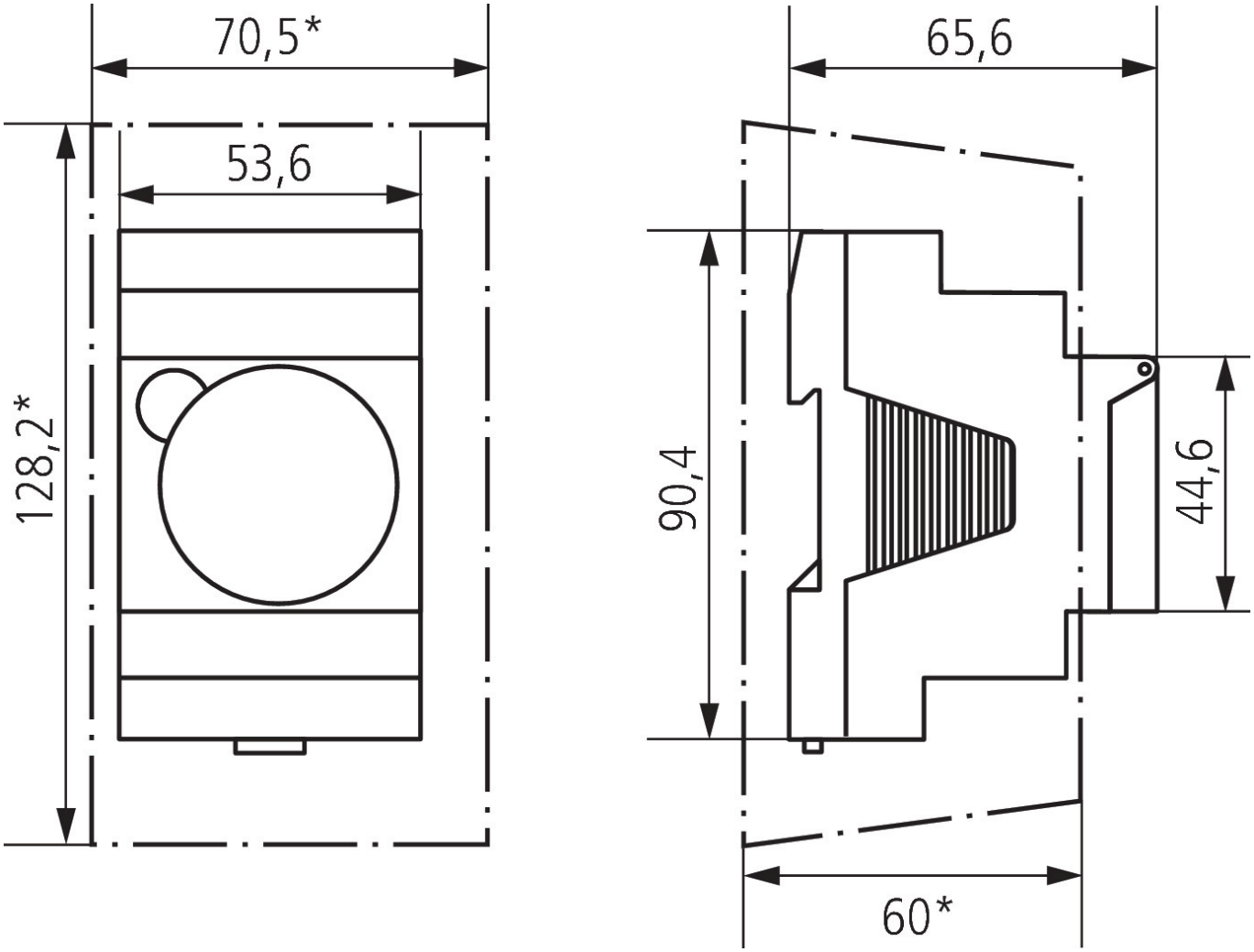

Accessories

Wall mounting kit 52,5 mm
Item no.: 9070050



Front panel kit
Item no.: 9070001

